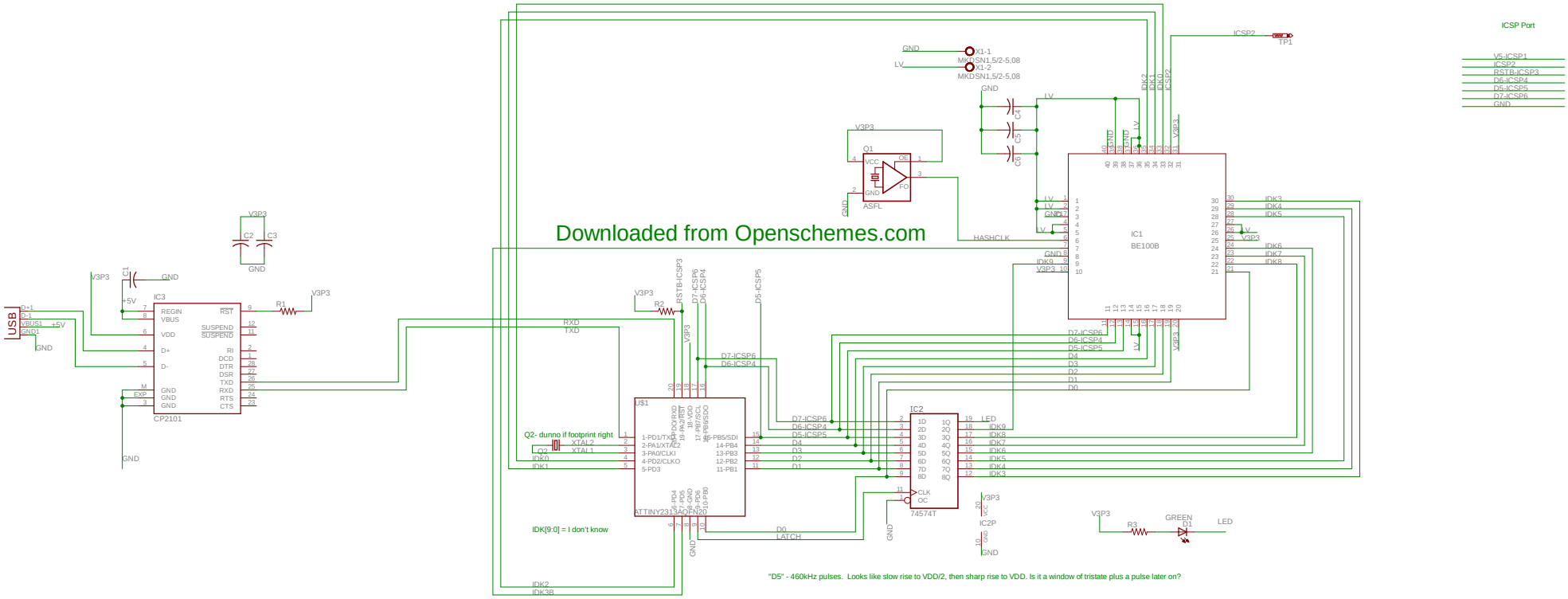

Downloaded from Openschemes.com